Compressor

Model AC0102

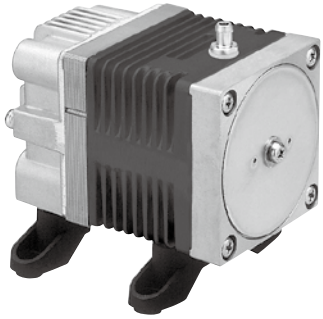

115 V/230 V 230 V

Airflow & Power Consumption

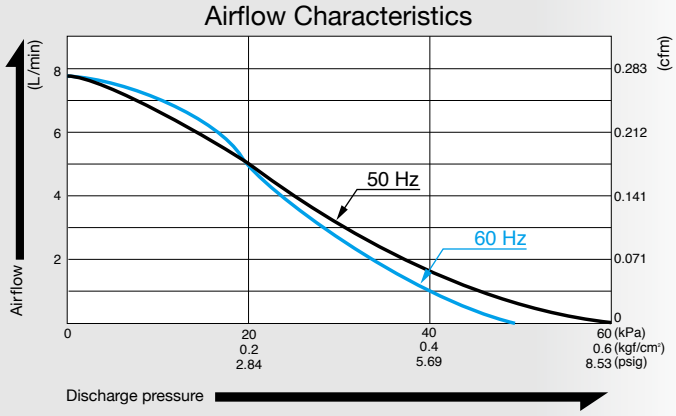

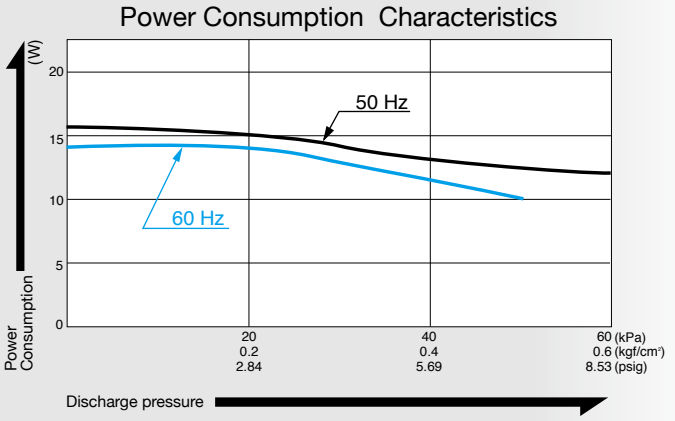

Specifications

Rated Pressure	20 kPa (0.2 kgf/cm^2) 0.2 bar 2.84 psig	
Rated Airflow	5 L/min 0.177 cfm	
Maximum Pressure	40 kPa (0.4 kgf/cm^2) 0.4 bar 5.69 psig	
Rated Voltage	115 V AC	230 V AC
Power Consumption	14 W	15 W
Rated Frequency	60 Hz	50 Hz
Rated Performance (MTTF)	10,000 hours	
Outlet	6 mm O.D. hose barb	
Duty Cycle	Continuous	
Coil Insulation Class	Class B for UL	
Mounting Dimensions	48 (L) x 62 (W) mm 1 - 57/64" (L) x 2 - 7/16" (W)	
Weight	0.7 kg 1.54 Lbs	
Leadwire Length	200 mm 7 - 7/8"	

Application Examples

Dripping Machine

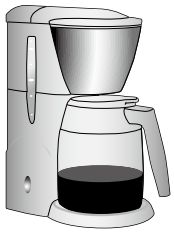

Blood Pressure Tester
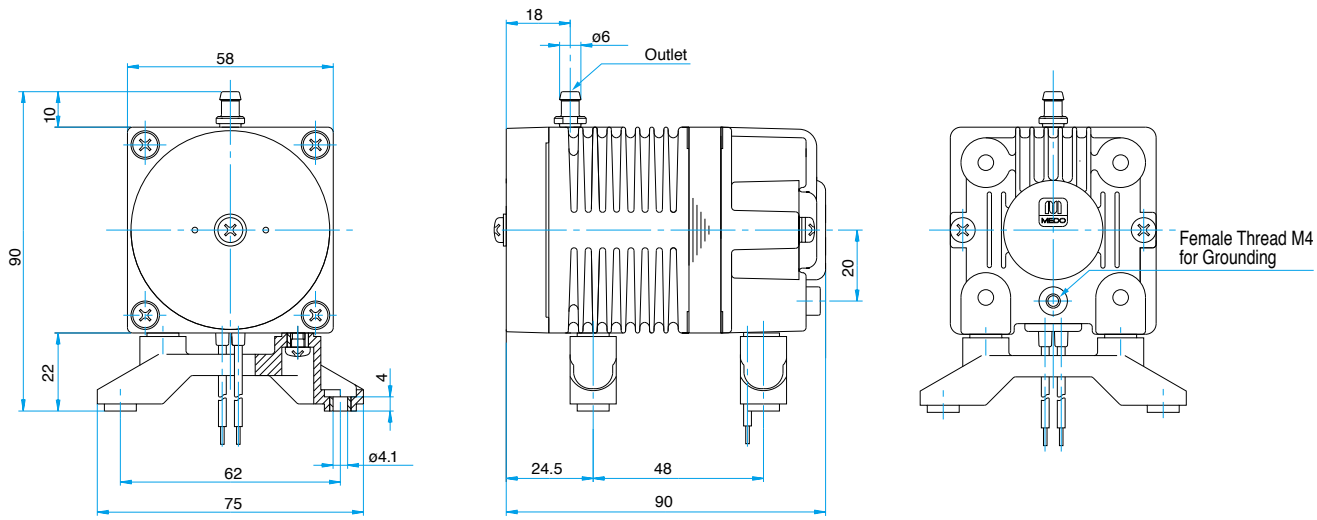
External Dimensions (Unit: mm)