Compressor and Vacuum Pump

Model DP0140

Brush DC Motor 12 V DC

12 V

Airflow & Power Consumption

Airflow Characteristics

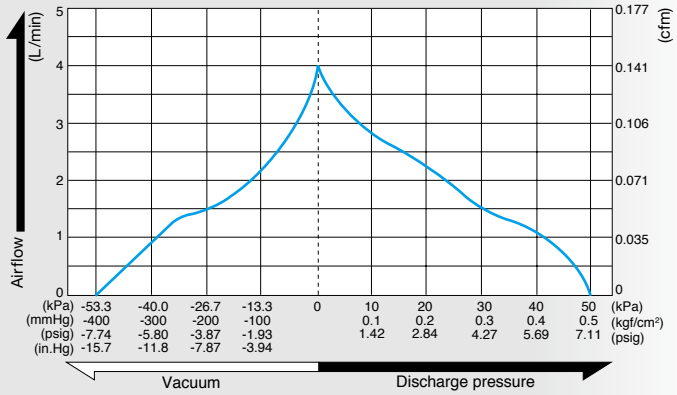

Current Characteristics

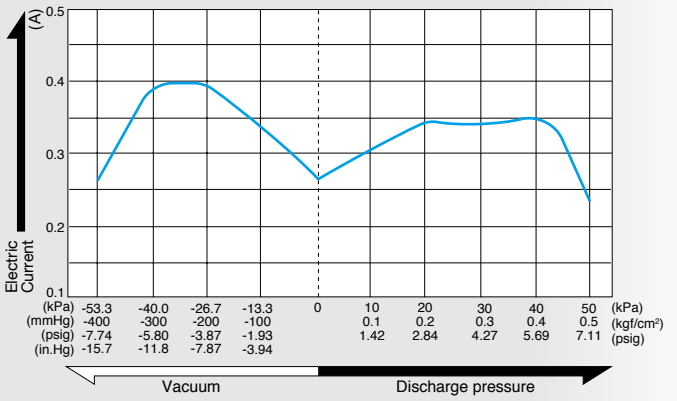

Specifications

Attainable Vacuum	-53.3 kPa (-400 mmHg) -533 mbar -15.7 in.Hg
Free Air Displacement	4.0 L/min 0.141 cfm
Rated Voltage	12 V DC
Maximum Pressure	50 kPa (0.5 kgf/cm^2) 0.5 bar 7.11 psig
Maximum Current	0.5 A
Duty Cycle	Continuous
Rated Performance (MTTF)	800 hours
Inlet	5 mm O.D. straight barb
Outlet	5 mm O.D. straight barb
Coil Insulation Class	E or its equivalent
Mounting Dimensions	52 (L) x 36 (W) mm 2 - 3/64" (L) x 1 - 27/64" (W)
Weight	0.19 kg 0.42 Lbs

Application Examples

Vacuum Sucking Pen

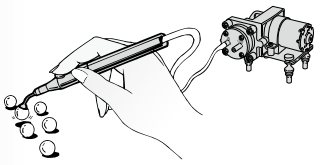

Blood Pressure Tester

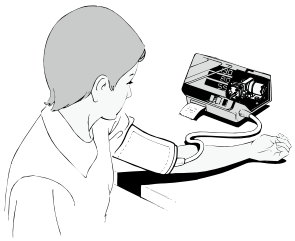
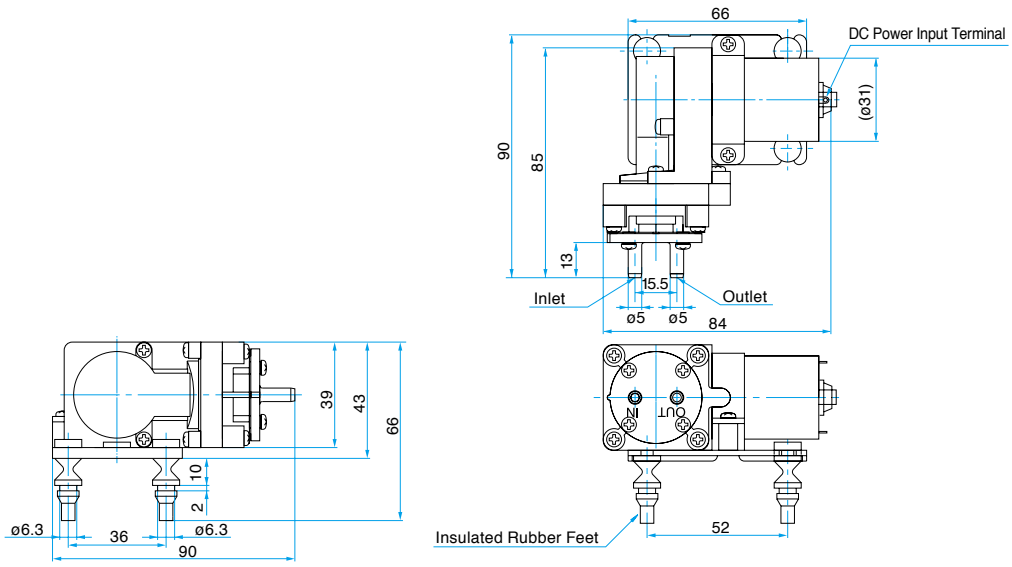
External Dimensions (Unit: mm)