Compressor

Model AC0920

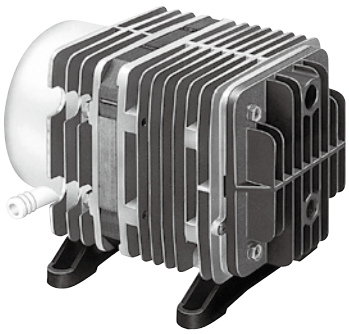

115 V (60 Hz) 230 V (50 Hz)

Airflow & Power Consumption

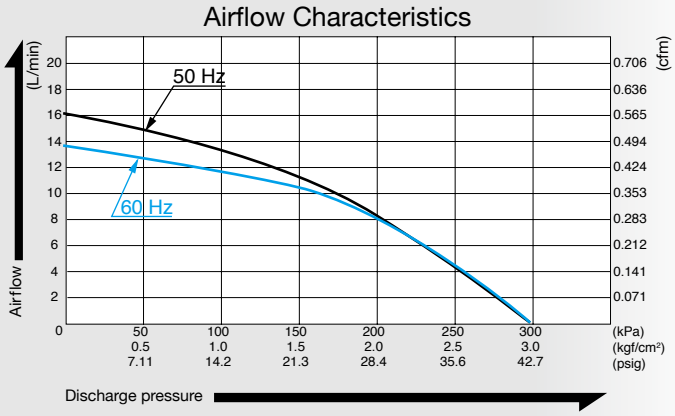

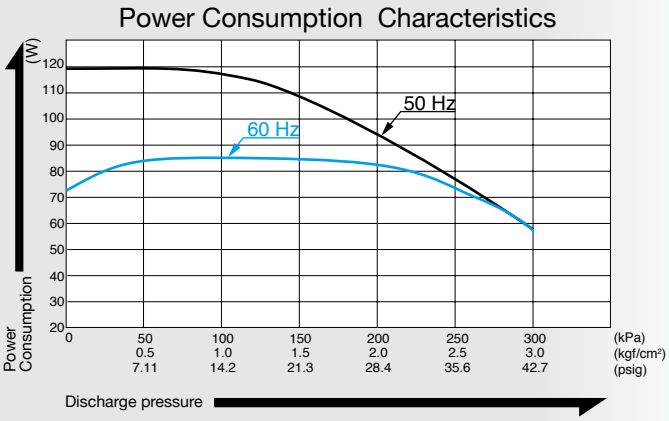

Specifications

Rated Pressure	200 kPa (2.0 kgf/cm²) 2.0 bar 28.4 psig	
Rated Airflow	8 L/min 0.283 cfm	
Maximum Pressure	300 kPa (3.0 kgf/cm²) 3.0 bar 42.7 psig	
Rated Voltage	115 V AC	230 V AC
Power Consumption	81 W	100 W
Rated Frequency	60 Hz	50 Hz
Rated Performance	3,000 hours	
Outlet	ISO Rc 1/4	
Duty Cycle	30 minutes	
Coil Insulation Class	E or its equivalent	
Mounting Dimensions	102 (L) x 130 (W) mm 4 - 1/64" (L) x 5 - 1/8" (W)	
Weight	5 kg 11 Lbs	
Leadwire Length	300 mm 11 - 13/16"	150 mm 5 - 29/32"

Application Examples

Air Cylinder/Chuck Driver

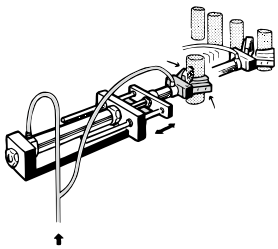

Leakage Tester

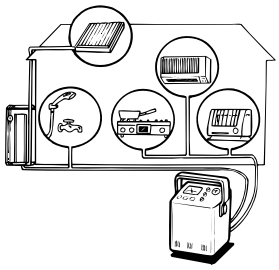
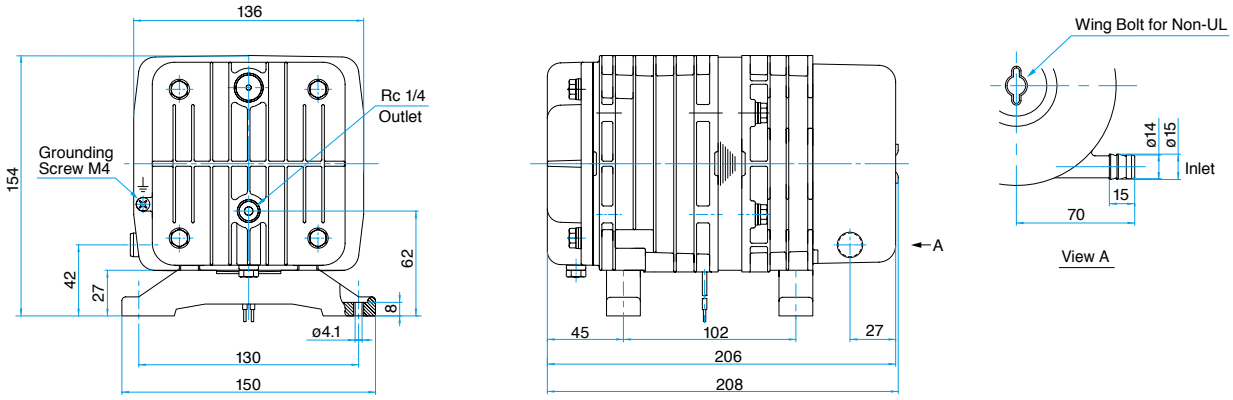
External Dimensions (Unit: mm)